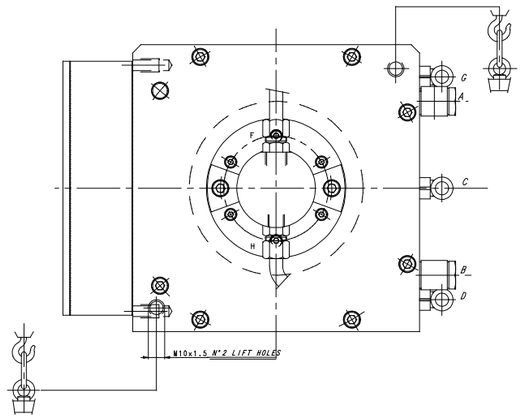

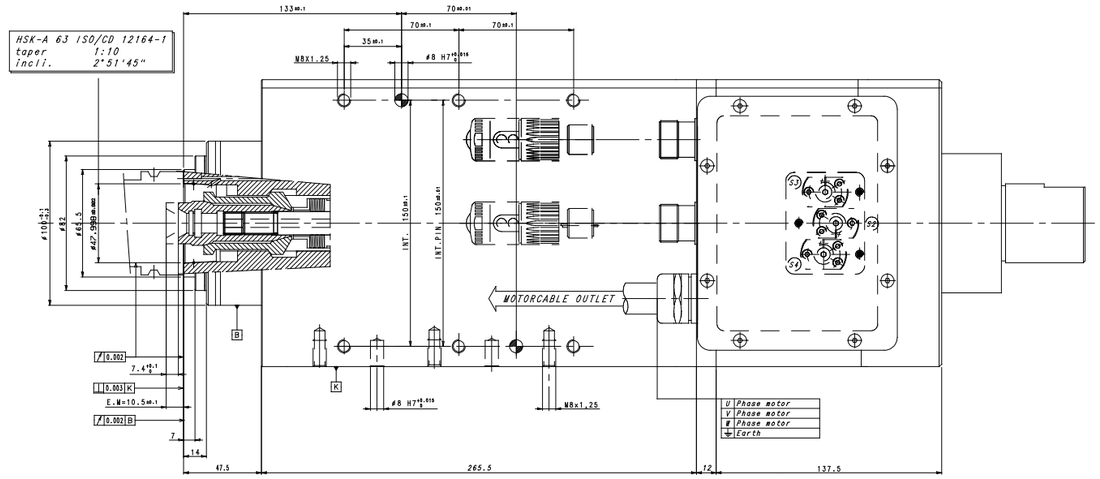

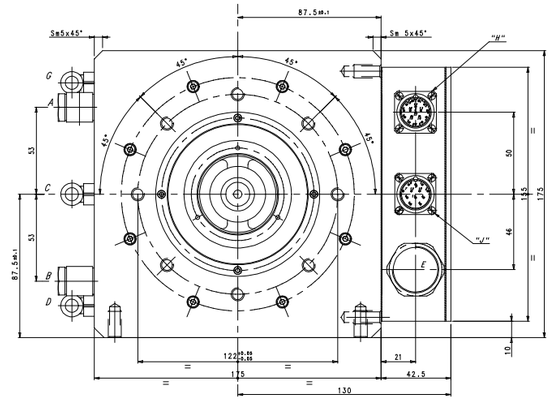

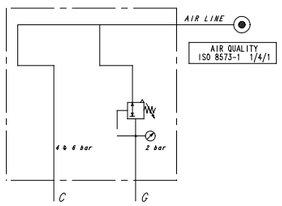

Air Inlet Bore: "C-G"

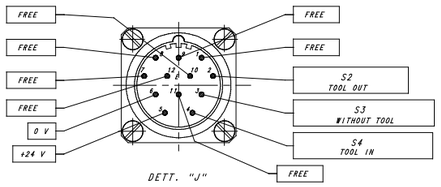

TOOL SENSORS CONNECTOR

INCREMENTAL ENCODER "VS SENSORIK" :
Type = RGW20-A-M3Z/T050 sin/cos 1V pp
N° impulses = 256

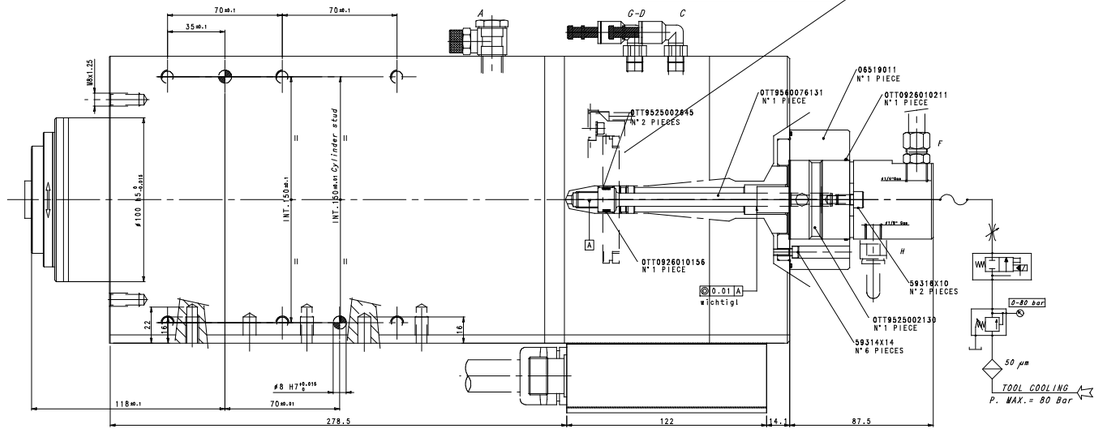

SPINDLE CONNECTIONS		
A	Inlet-Outlet motor coolant ø1/4"G	Q= 4 ÷ 6 l/min
B	Inlet-Outlet motor coolant ø1/4"G	Inlet Temperature 24° ± 2°C
C	Air inlet for cleaning taper ø1/8"G - P=4 ÷ 6 bar	
D	Air inlet piston forward ø1/8"G - P= 6 bar	
E	Outlet motor cable PG 21 (U,V,W,⏚)	
G	Air inlet front purge 1/8" Gas	AIR USE ≃7000 Nl/h
	ROTARJ JOINT CONNECTIONS TABLE OTT 1K-GD-M10x1-155 cod. 95.600.173.9.2	
F	Inlet of lubrorefrigeration liquid 1/4" Gas	P= 80 bar max.
	Filter grad 50 µm	
H	Outlet hole 1/8" Gas	

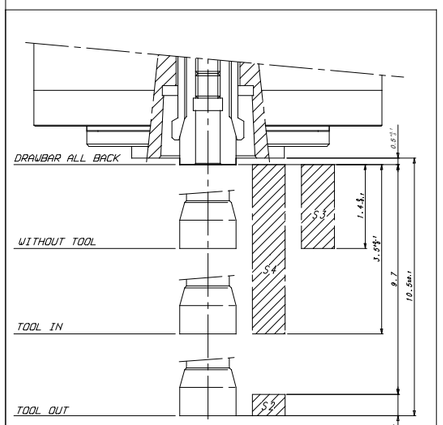

SENSORS LOGIC			
CONDITIONS	S2	S3	S4
WITHOUT TOOL	OFF	ON	ON
TOOL IN	OFF	OFF	ON
TOOL OUT	ON	OFF	OFF

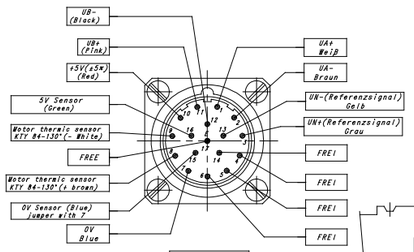

ENCODER + THERMOSWITCH SENSOR

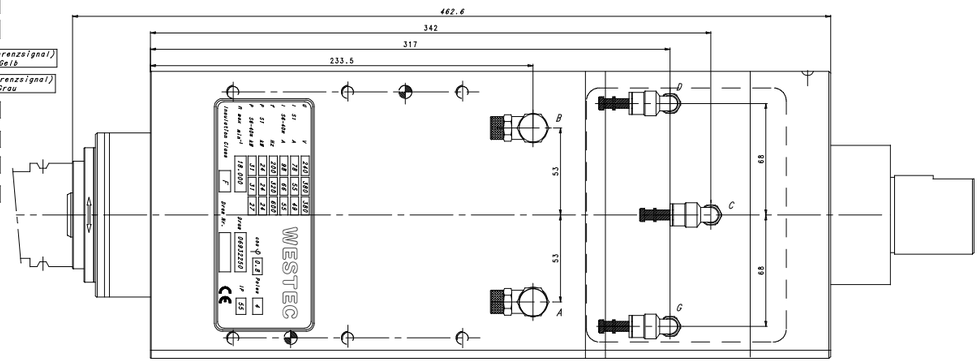

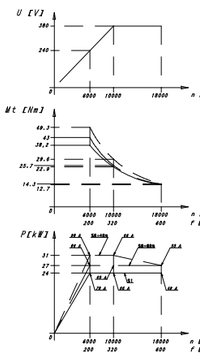

POWER LOSS: 4560 W

MOMENT OF INERTIA OF MASS 0.007 Kgm²

Ind.	Data	Disegnato	Verificato	Approvato	Tolleranze generali secondo la norma UNI-EN 22768
0	28/01/2019	Mecostarato			

Cliente:

Denominazione: ELECTROSPINDLE — *6932250-A-GB*

Utilizzo: MILLING — Attacco: HSK-A 63 — Rotazione: CW-CCW

Lubrificazione: GREASE — n 18000 min⁻¹ — P 24 [kW]

Riferimento:

Scala	Numero disegno	Foglio	Fogli	Rev.
1:1	06932250-A-GB	0	111	0

Data/Firma Modifica | Ind. | Data | Disegnato | Verificato | Approvato